Hunting for set-up times

Fast and secure from the workpiece model to the clamping plan for solid-oriented integrated EXAPT NC planning

The production times of powerful NC-production plants developing shorter and shorter force to open the hunting for set-up times with their often cost-pushing shadowy existence again and again to keep the production profitable. Extended possibilities to best possibly organize the engineering chain from the construction up to the production result from the increasing use of 3D-Solid CAD-systems. A Solid-based, reality-close clamping planning relevantly contributes to a handling-secure and therefore set-up time-saving formation for the NC production to support the Manufacturing Process Management (MPM). A clamping group built of Solid models is there the reality-close basis for the integrated NC-programming with EXAPT.

Today's efficient NC manufacturing plants and tools lead to very short production and idle times in the workpiece machining. Although an intensified use of manufacturing plants at their limits of power reduces the loading time by little fractions normally, it otherwise leads to increased wear and failures with resulting costs. Measures to coordinate the set-ups and to cut the set-up times leading to stoppage times of the manufacturing plants offer more potential. The hunt for set-up times can be opened with an arsenal of appropriate technical and organisational measures.

All time slices have to be considered that come up for set-up of the tools, workpiece and – not to forget – the NC control data. The time slice for set-up with the correct NC control data often turns out to be the secret time killer in the shopfloor, especially if, besides the loading of the NC control data, searching, testing, alteration re-loading into the data pool or even the re-generation are additionally contained in this time block.

Diverse technical and organisational solutions are available for the set-up of tools and NC control data, which can, in connection with systems for NC-planning, DNC-use and tool organisation or also powerful production-communication-systems, lead to optimal results in the production management.

There also exist numerous puzzled-out technical solutions to gain time for the set-up of workpieces. Modular clamping systems offer especially for the single-part or small-lot production flexible application possibilities. Efficiencies can be used in combination with alternating pallets, zero point clamping systems and devices for multiple clamping of workpieces with clamping angles, rigid towers etc. So the filling ratio of the machine can be increased such far that the loading is, also in the case of smaller parts, sufficient to work with low-personnel shifts.

But this to have an optimal Manufacturing Process Management (MPM) places increased organisational de-

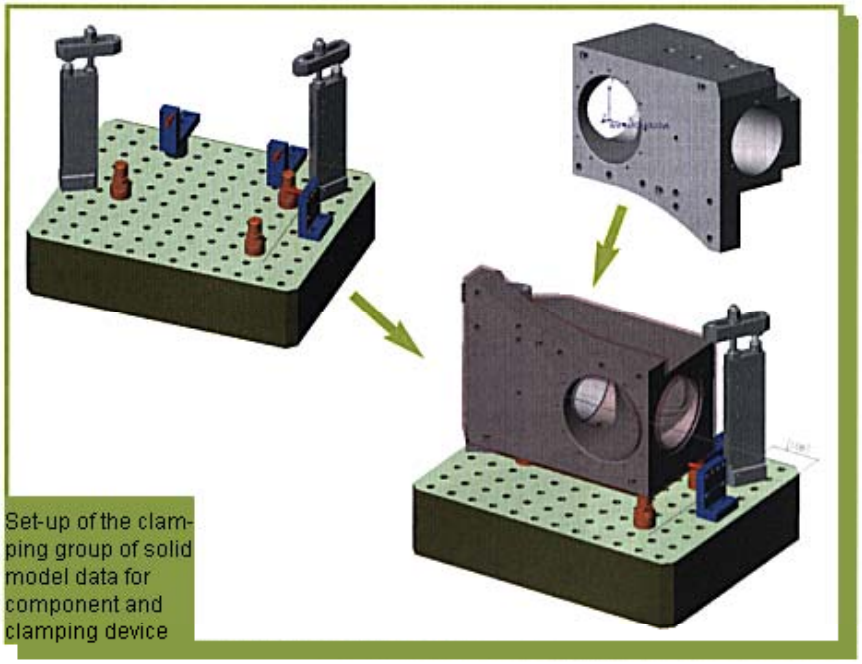

Set-up of the clamping group of solid model data for component and clamping device

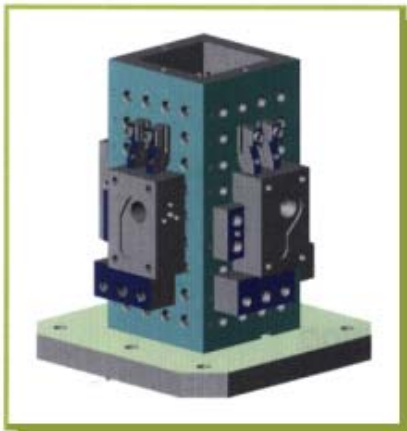

Rigid tower

Clamping plan with part-specific clamping fixture

mands. A continuously smoothed run of material and information is, besides the technical practicability, required at multiple clamping of different parts from different orders, to make all finished parts available for low costs within the preset time schedule. A continuous support with efficient IT-systems is essential to control this component- and order-comprehensive procedure.

It is target of the new clamping system to let manufacturing plants be running without assembly-process-related stoppage. That can be reached by making the assembly processes parallel to the machining time. But in the practice it can often be seen that the purchase of convenient clamping systems is not enough to produce low-cost. The systems have to be controlled technically and organisationally. So it

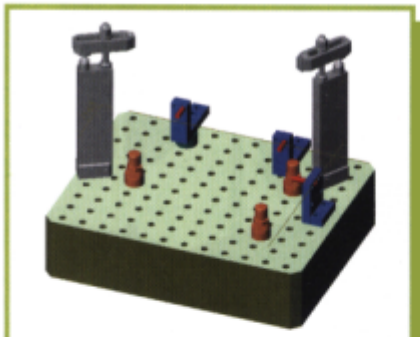

Modular clamping system (solid models of the AMF-system of the Andreas Maier GmbH & Co., Fellbach)

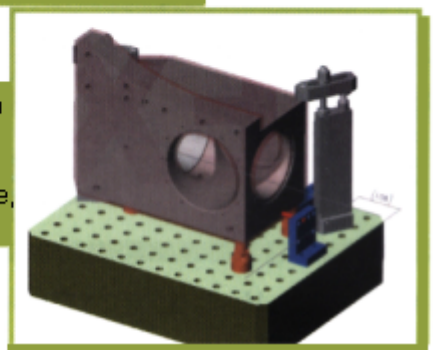

Clamping plan with modular clamping system (Picture: Klingelnberg Söhne, Hückeswagen)

has e. g. to be made secure that the interpretation, provision and use of the clamping devices is made in a continuous and uniform way during the course of the production planning, preparation and execution. It is not allowed to make new assumptions for working plan, calculation documents, NC control data, clamping plan, clamping device disposition, clamping group structure and clamping group transport or the loading of the clamping group, because the use conditions are altered by this again and again, and that leads to substantial multiple expenses that for the most part lead an undetected shadowy existence in the non-productive area. The application conditions are often altered several times as some boundary conditions have not been clear enough in the preliminary stage or decisive details have not been considered.

The capital tie-up in modular clamping systems is high, the production times on efficient NC-plants are short and if, in the extreme case, the machine operator has to make a new clamping planning on the machine – with all following effects on the already generated NC control data – setting-up parallel to the production time is not possible anymore, stoppage times run away and the productivity expected by investments in clamping devices of high quality will be missed.

A machining-time-parallel clamping is required to bring the cost-effective set-up part when setting-up a workpiece near zero. But this requires set-up times to be reached lying below the machining times that are getting more and more shorter. A short loading time of the workpiece into the machining room is also necessary. Appropriate technical solutions are available to reach this, especially in the case of prismatic workpieces. To be able to process all time slices for workpiece handling, building-up of the fixture, alignment/marking, clamping etc. parallel to the machining time it is favourable to build clamping groups consisting of workpiece, workpiece carrier and clamping devices. All groundwork of the workpiece clamping has to be executed continuously and based on each other.

Qualified set-up does not only mean to proceed fast, but also secure and proper. The work setting has to be seen as basic frame condition for the NC programming as the process parameters for the machining are put on the clamping stability and the keeping of tolerances depends on it. The clamping conditions are also basis for the calculation. The clamping position and orientation of each workpiece are basis for the tool paths in the NC control program. The accessibility of the planned machining positions by the tools must be given. The tool paths have not only to run collision-free to the workpiece, but also to the clamping devices. A secure and fast handling of the clamping group over several workstations has, if necessary, also to be guaranteed. Additionally it has to be noticed that an adequate information quality is required in the used production documents, especially for the fast throughput of repeat orders with higher time-offset like repair orders. Qualified set-up planning is especially then indispensable, when the task is to produce cost-intensive rough parts only available as individual piece in a fast and result-proof way.

Personnel-neutral set-up is not only required in the case of shift work, but also, if irregular or unpredictably replacement of personnel (exchange, holiday, illness) must be taken into consideration. The necessity for fast, clear and precise information provision does totally apply here to hold the set-up

times minimally. Here it is especially also about the additional factor of the mental set-up time of all persons involved in the production process, as it is, after some time also for the originator, only possible to find into sketched clamping plans with increased effort and remaining residual risk.

The advance of the 3D-Solid system in the engineering area does offer new possibilities not only for the product design, but also for the production and here especially in the use of NC-controlled plants. The reality-close virtual displays and animations of technical products and their assemblage or application from the single assemblies/components are impressing. The clearness of the virtual production planning offers great advantages for the design safety and with this a fast transformation without cost-impelling physical testing and optimisation loops on the manufacturing devices. All participants of planning and implementation of the production, from jig and fixture designer up to machine set-up man, can quickly orientate themselves with the clear model displays as part of a Manufacturing Process Managements and can purposefully, rapidly and safely deal with their tasks. Not the wind but the right setting of the sails determines the success.

The hurdle time exposure for the Solid modelling of objects that take part in a production process will get easy conquerable if model data that have already been formed when engineering the objects for the production process design can be taken over continuously. This is for instance when the construction of clamping devices is made like the one of the workpiece with a Solid designer and after that the model data are made available to the user for clamping planning. This offers advantages in the case of external purchase of modular clamping systems and also in the case of own construction of clamping devices.

The result of the clamping planning is the arrangement of workpiece and clamping devices on the workholder. This clamping group can be built of the model data of the required single objects with the assembly functions of appropriate Solid systems like here with SolidWorks. This clamping group is the holding unit for the machining device.

Today's tendency to hold the stoppage times of NC-plants little is to already make position and alignment of the workpieces when assembling the clamping group outside of the machining device in such a way, that the cutting can begin immediately after loading this unit. If position and orientation of the workpiece cannot be secured precise enough by fastening in the clamping device, it has to be decided, if this has to be made by measuring in the machine and balancing via the control or by measuring and aligning via the setting elements of the fixture on a separate measuring position.

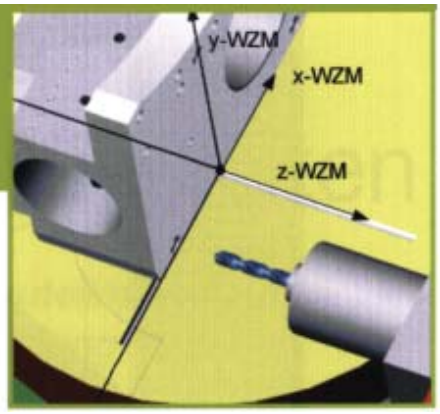

Adjustment of the machine coordinates with orientation of the Z-axis towards the tool axis

During change-over from Solid model of the part to Solid model of the clamping group the change of the reference points has to be considered for the NC machining. When designing a part the designer normally refers to a part coordinate system under consideration of functional references for the assigned measuring or to dependencies of several parts to each other. But for the NC planner are the tool paths for the machining important during his machining modelling and these orientate on the coordinate system of the machine tool. The coordinate-zero of the NC machine lies in case of the simplified planning model in the middle of the rotary table and the z-axis (Z-WZM) in direction of the tool/spindle axis, no matter how the workpiece with its own array of coordinate system is loaded or rotated into the machine.

A 2D-display of prismatic parts normally is made in the prevailing single views. The NC programmer then generates the geometry of every single view in the x,y-plane. So the z-axis stands vertical to the view and is assigned to the orientation of the tool axis. The right orientation of the workpiece on the machine from the prevailing machining sides to the tool axis takes place by setting commands for rotation or swivelling for the workpiece or tool loading and the input of origin data or origin corrections. This 2D-oriented procedure treats the workpiece as an object cut up into views. Inattentions during NC

When forming a clamping group several boundary conditions have to be considered like

- △ Allowance tolerances for the fictitious alignment of the finished part in the blank part
- △ Tolerance chain workpiece, clamping device, workpiece pick-up, machine
- △ Boundary conditions at the workpiece for pick-up, stop, fixture and transport (especially pre-machining, inlets in the casting etc.)
- △ Gauging between clamping plan and NC-control data
- △ Nominal setting of the clamping group and correction conditions in the machine
- △ Stability for the machining
- △ Zero offset at the machine
- △ Possibility to locate the workpiece in the machining area of the machine
- △ Collision-free accessibility of the machining positions by the tools
- △ Chip disposal
- △ Transport of the clamping group (manually, with transport devices)
- △ Clearness of the clamping plan for the production scheduling for disposition of the clamping devices and the production execution to set-up the workpiece

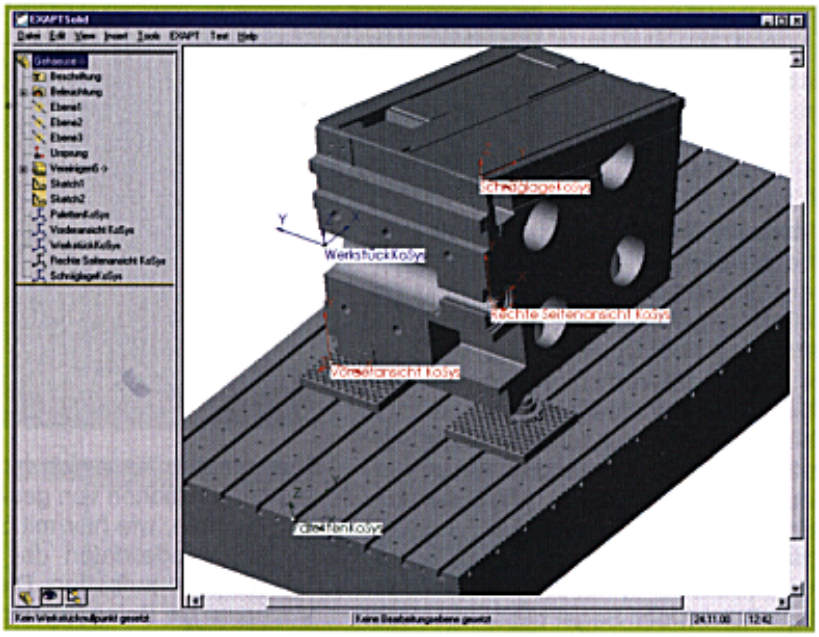

Here the whole clamping group in EXAPTsolid is displayed with assignment between the coordinate systems for the part (blue), the pallet (green) and the single machining sides (red).

programming or clamping or the zero input on the machine have already lead to some rejects or machine crash. The connection between the references of the part model and the ones of the machining model can fully be built up and displayed clearly in case of Solid-oriented procedure. So the frame conditions for NC planning and the set-up of the workpiece in the production are determined clearly and a new production-process-planning-quality will be reached. But it is precondition that the way from the part modelling to the machining modelling can managed without break or information loss over the different system areas.

The main contents of the machining model are travel paths of the NC machine that are assigned to a tool and the parameter for the engagement of the tool for machining. There it normally is of advantage for the NC programmer to select contemporaneously the areas out of the workpiece model that have to be machined next with a tool or tool sequence. Geometry data will be completed if required, production-determining data will be added (machining object formation) and the detailed NC control data plus all necessary accompanying information for set-up, adjustment etc. will be generated under consideration of the whole compound machine, tool, clamping device, and workpiece.

First applications in practice with the use of EXAPT systems in the integrated compound with the Solid-CAD-system SolidWorks have brought efficient advantages in the displayed engineering chain of the Manufacturing Process Management and set new standards. But it could be seen that not only the designers have prepare themselves for the new possibilities of the 3D-Solid modelling compared to the 2D-modelling, but also the manufacturers, from planner up to machine controller, to fully use the existing possibilities.

Writer:
Dipl.-Ing. Lutz Vogt,
Project manager,
EXAPT Systemtechnik GmbH

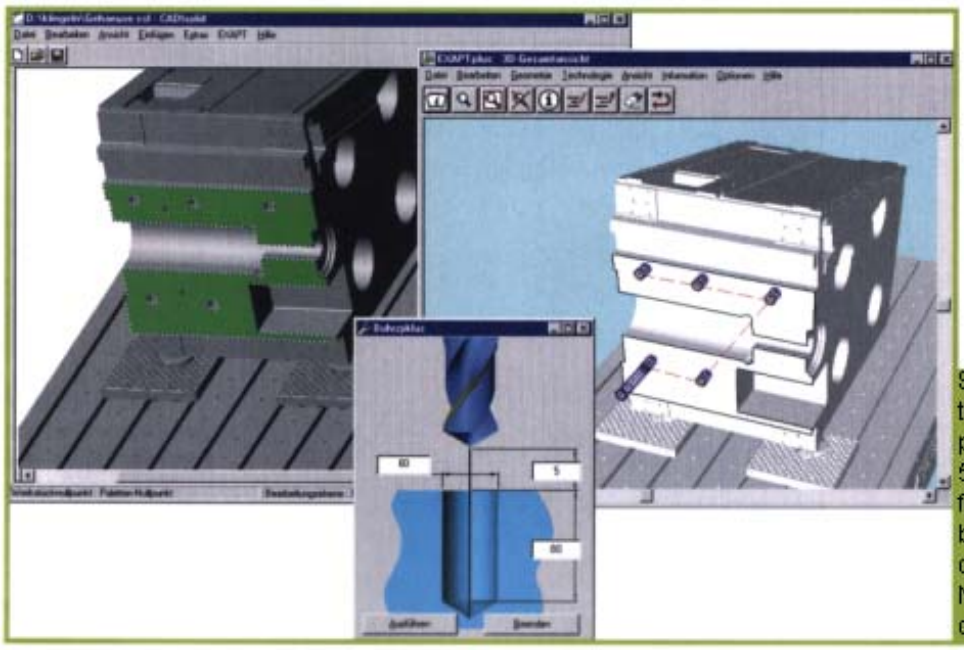

Selection of the machining positions for 5 holes of the front view of the body and machining-object-oriented NC-control data generation